

FIBREBLOW® ESSENTIAL

PLANT TECHNOLOGY FOR PREFABRICATION

Combinations

Variant ① Fibreblow® Essential Feeder Lift + EM4xx-WB + Fibreblow® Essential Plate (+ VS40) (+ VS55M/VS75M)



Variant ② Fibreblow® Essential Feeder Lift + EM4xx-WB (+ VS55M/VS75M)

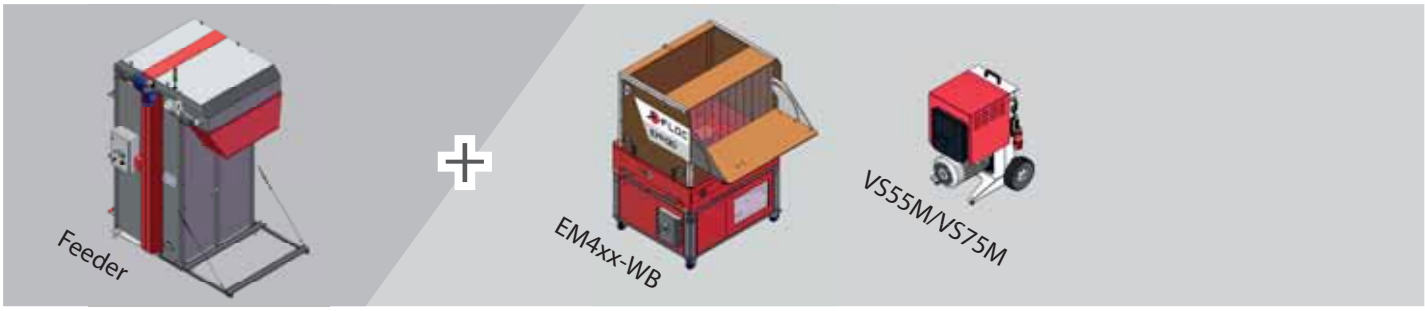

Variant ③ EM4xx-WB + Fibreblow® Essential Plate (+ VS40) (+ VS55M/VS75M)

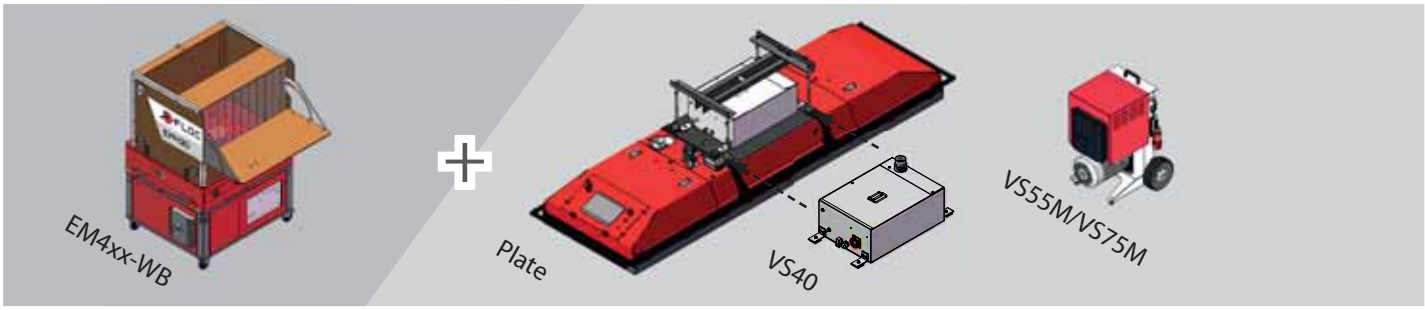

X-Floc Fibreblow® Essential

The benefits of industrial blow-in insulation

Modern prefabricated timber houses are characterised by their good ecological balance and pleasant living climate. Insulation without thermal bridges reinforces both aspects and, especially when natural insulation materials such as wood fibre and cellulose are used, blow-in insulation offers ecological and economic advantages. The method is suitable for clean filling of every component. There is no need to cut and install insulation boards. There is no waste or hazardous waste that needs to be disposed of, and only one work step is required for all insulation thicknesses. The automation of insulation processes means further time and cost savings, especially for the prefabricated house manufacturers, carpenters and wood construction preparers.

Factory filling systems are designed for low-dust and extremely fast filling of roof, wall and ceiling elements. The basic version of the X-Floc Fibreblow® Essential system consists of a big bale conditioner, an insulation blow-in machine and an injection panel, which can optionally be equipped with an amplifier. It has a modular design and can be adapted to customer requirements for use in carpentry workshops and small woodworking businesses, as well as integrated into fully automated production lines.

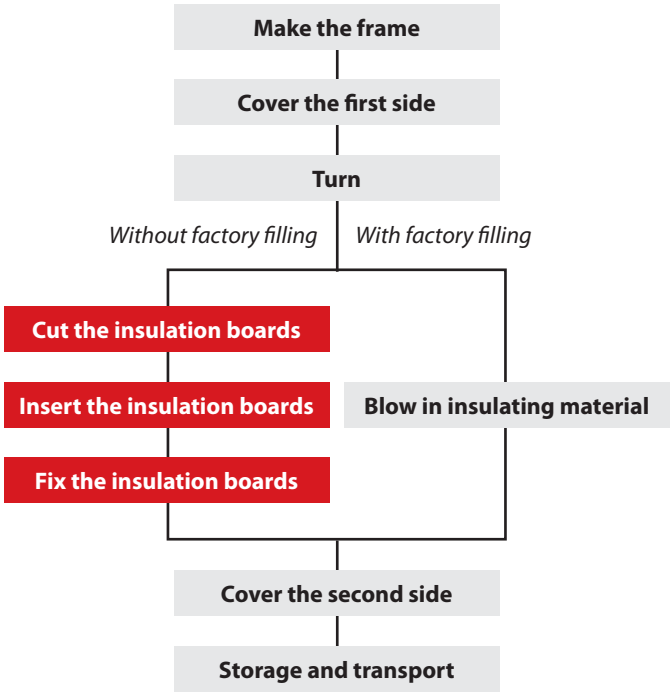






EMH30

X-Floc Fibreblow® Essential

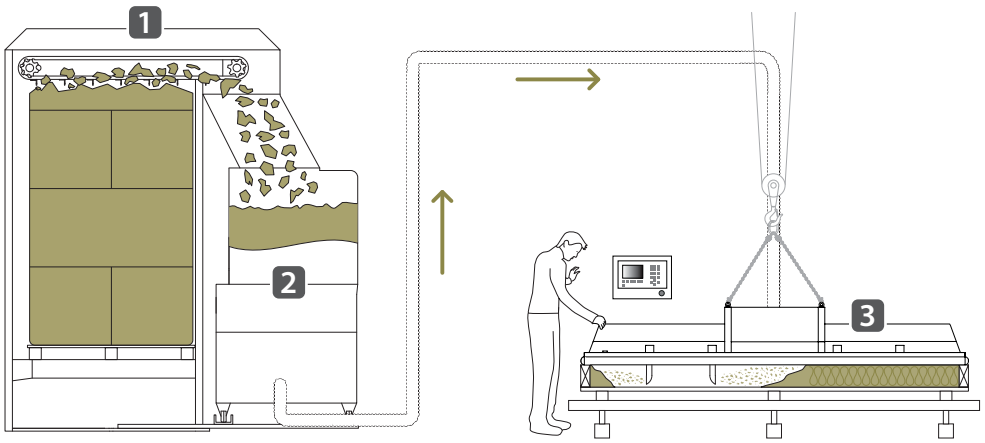

1 Big bale conditioner 2 Blow-in machine 3 Blow-in plate

Component: Big bale conditioner

The big bale conditioner is used to process delivery bundles which, depending on the manufacturer, consist of compressed insulation material blocks or stacked insulation material bales. It is ideal for stationary use in factories and, with its insulation blow-in machine and injection panel, ensures highly efficient filling of prefabricated wall and ceiling elements. The big bale conditioner can be loaded with bales using a pallet truck, forklift or conveyor belt. The bales are transported to the milling machine via the lifting table and broken down layer by layer. The loosened material is fed to the blowing machine via an ejector and processed further there. Logical control and numerous sensors ensure virtually uninterrupted material flow.

The top five advantages

- Can be combined with many blowing machines
- Perfectly suited for processing big bales of cellulose, wood fibre, glass wool and rock wool
- Virtually uninterrupted material feed and considerable rationalisation potential for insulating prefabricated elements
- Quick and easy loading and cleaning
- Optional weighing system for precise and reproducible process control

Technical data

	Fibreblow® Essential Feeder Lift (GBF1050)
Dimensions (LxWxH):	
Surface area	approx. 1452x1688x3191mm
Overall dimensions	approx. 2183x1688x3191mm
Internal dimensions for bales	approx. 1200x1200x2300mm
Weight	approx. 1220kg
Electrical connection	400/50Hz/16A
Rating power	2,5kW
Production capacity	up to 5 cycles per hour (depending on the bale approx.1500kg/h)
Insulating materials	loose insulating materials, e.g. cellulose, wood fibre, glass wool and rock wool
Control	control panel


FLOC GBF1050
EM430

X-Floc Fibreblow® Essential

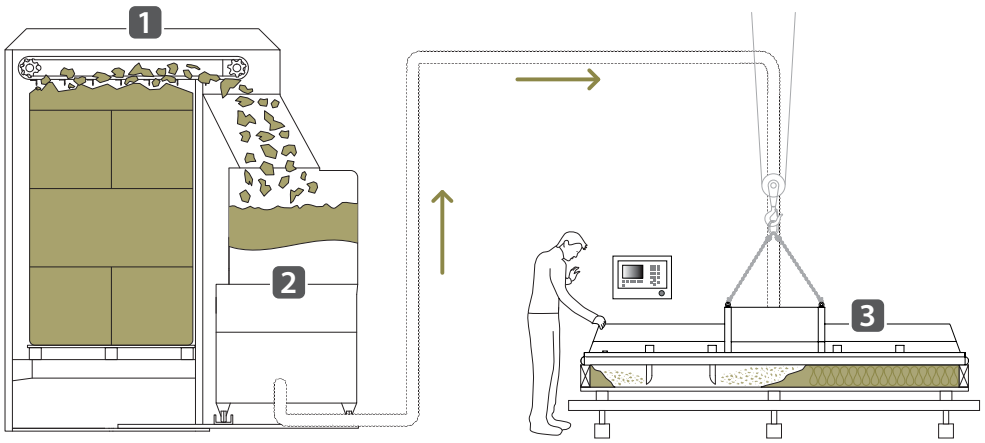

1 Big bale conditioner 2 Insulation blow-in machine 3 Injection panel

Component: Insulation blow-in machine

The consistently high performance of more than one and a half tonnes of material throughput per hour, thanks to a high-performance turbine for air generation, makes the EM430 blowing machine the first choice for factory filling. It is also capable of running 24/7 and is extremely durable. This is ensured by the contactless drive with a virtually wear-free motor without carbon brushes, as well as other high-quality components. The EM430-WB product variant is connected to the injection plate for interlinked operation of a plant filling system, whose control system takes over all machine settings relevant to the injection process. Manual intervention is no longer necessary.

The top five advantages

- Consistently high air and material flow rate
- Long service life thanks to low-wear technology
- Powerful shredder for optimum preparation of the insulation material for conveying and professional blowing
- EM430-WB version optimised for use in a factory filling system
- Can be used as a stand-alone machine or in combination with a material disintegrator

Technical data

	EM430-WB
Dimensions (LxWxH)	approx. 1300x1020x1800mm
Weight	approx. 427kg
Electrical connection	400V/50Hz/3x16A
Air generator	turbine 7,5kW
Material flow rate	up to 1600kg/h
Insulating material	loose insulating materials, e.g. cellulose, wood fibre, glass wool and rock wool
Hose length	max. 150m
Control	in chain operation via the control of the injection panel


GERSAG
X-FLOC
EM480
X-FLOC
FIBREBLOW®
ESSENTIAL PLATE


X-FLOC
FIBREBLOW®
ESSENTIAL PLATE

X-Floc Fibreblow® Essential

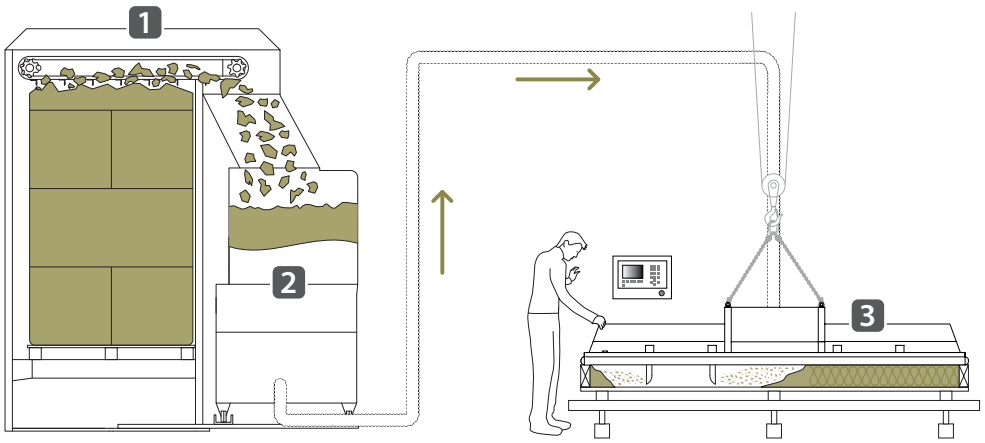

1 Big bale conditioner 2 Blow-in machine 3 Blow-in plate

Component: Injection panel

In the standard version, the injection panel of the Fibreblow® Essential product line is available in lenghts of 3m to 4m, respectively equipped with 5 to 7 injection nozzles. Depending on the insulating material used and the desired injection density, a material flow rate up to 1t per hour is possible. All components in a factory filling system are controlled via the injection panel using industrial control technology „Made in Germany“ and the corresponding software. All settings can be made by the user via a menu-driven touch screen. The blowing process can be started immediately after the injection panel has been placed on the single-sided unplanked element, its dimensions (length, width, height) have been entered and the insulation material has been specified.

The top five advantages

- Suitable for processing loose insulation materials, e.g. cellulose, wood fibre, glass wool and rock wool
- Automated blowing process tailored to your blow-in insulation material
- Uniform density distribution (adjustable) independent of the compartment geometry
- Scalable modular system
- Connection to crane or multifunction bridge possible without any problems

Technical data

	Fibreblow® Essential Plate (EP800)
Dimensions (LxWxH)	approx. 3000-4000x900x490mm (5 nozzles up to 7 nozzles)



Weight	approx. 300kg
Electrical connection	230V/50Hz/10A
Material flow rate	up to 1000kg/h
Insulating materials	loose insulating materials, e.g. cellulose, wood fibre, glass wool and rock wool
Control	touch screen

X-Floc Fibreblow® Essential

Visibly high quality

The X-Floc factory filling system is designed for integration into existing and new production lines. Injection panels equipped with multiple nozzles allow simultaneous filling of wooden frame elements of any cavity size, and the system component for storing and preparing large bales ensures fast and uninterrupted introduction of the insulation material. The timber frame elements are filled with great precision in the factory using an injection panel connected via a crane system or a bridge solution corresponding to the desired degree of automation, whereby the insulation material neither dusts nor trickles down. The result of the blowing process – a jointless and diffusion-open insulation layer without thermal bridges – can be checked by visual inspection during industrial factory filling.

Suspension: Gantry crane

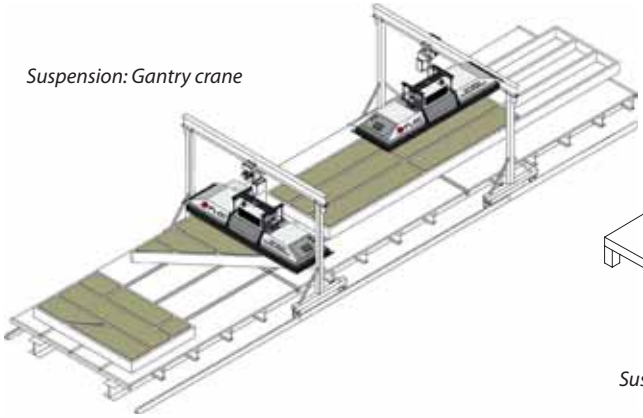

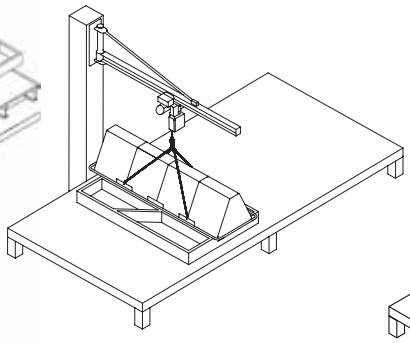

Suspension: Slewing crane

Suspension: Multifunctional bridge

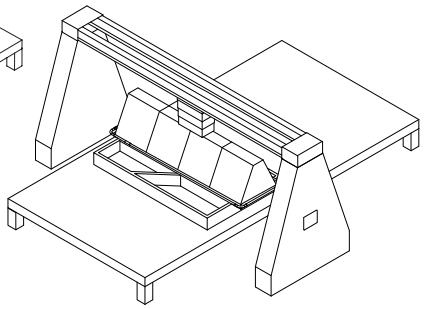



X-Floc's Fibreblow® product range

Fibreblow® Essential Line

optimised for the prefabrication of small series







Fibreblow® Premium Line

optimised for highly automated series production

PATENT-PROTECTED







Feeder Drop and Feeder Lift

- Optimal fibre pre-treatment from bale breaking to fibre separation
- First in – First out principle for gentle fibre disintegration without shearing stress
- Quick and easy loading and cleaning
- Remote maintenance from monitoring and diagnosis

Premium Plate

- Specialised geometry for uniform density distribution of the insulation
- Fast compartment filling thanks to optimally prepared fibres
- Minimal mounding (±10 mm) thanks to the patented nozzle design
- Precise placement thanks to the position laser
- Healthy working conditions: low-dust filling with encapsulated plate

See our product website for more details:

www.x-floc.com

SINCE 1994 X-FLOC GERMAN ENGINEERING

Shaping the future of insulation

X-Floc worldwide

www.x-floc.com



You can find many items from our portfolio – including those for special applications – in our online shop:

Your X-Floc representative

X-Floc Dämmtechnik-Maschinen GmbH | Rosine-Starz-Straße 12 | 71272 Renningen | Germany | Tel. +49 7159 80470 30

Prices on request . Published 11/2026 . Subject to changes and errors